METVISA

INSTRUCTION MANUAL

Installation| Maintenance | Use | Safety

Industrial Gas Fryer

Image merely illustrates.

Model: FIG.20

Models

FIG.20
FIG.44

EXPORT
MADE IN BRAZIL

Ref. PRO-316_ENG
Rev. 10.0 - 07/2026

CONGRATULATIONS,

You have just purchased a IMG-BRASIL equipment, product of the highest quality, safety and efficiency.

Founded in 1989, IMG-BRASIL is a respected company as one of the best and most complete companies in the field of gastronomy equipment manufacturing.

Constant innovation and improvement of its products, using top-of-line raw materials, ensure superior products consumed in Brazil and in more than 25 countries worldwide.

THE RELIABILITY AND CERTAINTY OF A GOOD PRODUCT ARE IN THE NAME

METVISA

IMPORTANT:

PRODUCT FOR PROFESSIONAL USE. DO NOT USE BEFORE READING THE MANUAL CAREFULLY.
IN CASE OF QUESTIONS, PLEASE CONTACT US::

IMG-BRASIL Gastronomy Machinery Industry Ltda.
CNPJ 11.193.347/0001-14 - CREA 131726-3
Road. Antônio Heil – KM 23 Nº 5825 – Neighborhood: Limoeiro – ZIP CODE 88352-502
Brusque – SC – Brasil - Phone/fax. +55 47 3251-5555
Mail: export@metvisa.com.br - Website: www.metvisa.com.br

INDEX

1. Safety Information 4
1.1 General Warnings 4
1.2 Mechanical Safety 5
1.3 Electrical Safety 6
2. Technical Characteristics 7
2.1 Main Components 7
2.2 Technical Data 8
3. Installation 9
3.1 Equipment Layout 9
3.2 Electrical Connection 10
3.3 LPG Gas Installation - Recommendations and Care 11
3.4 Safety Procedures and User Instruction 13
4. Equipment Use 13
4.1 Utility 13
4.2 Commands 14
4.3 Operating Procedures 15
5. Cleaning and Maintenance 19
5.1 Cleaning Procedures and Products Used 19
5.2 Breakdown Maintenance and Procedures 21
5.3 Prolonged Interruption in Use of the Equipment 22
6. Analysis and Troubleshooting 22
6.1 Problems, possible causes and solutions 22
7. Useful Life of the Equipment and its Components 24
8. Applicable Standards 24
9. ANNEXES 25
Electrical Schematic FIG.20/44 25
Exploded View Drawing 26
Spare Parts List 27

ATTENTION!

The characteristics, pictures and figures presented in this manual should be considered for information. IMG BRASIL reserves the right to make such modifications as may be deemed necessary without prior notice.

1. Safety Information

1.1 General Warnings

• Cautions / precautions must be observed when installing, using, maintaining and discontinuing use of this equipment;

• Before carrying out any operation (assembly, use, maintenance and reuse after prolonged use of the equipment), read the manual carefully;

• The equipment must be used by trained personnel familiar with the use and safety regulations described in this manual;

• This equipment is not intended for use by persons (including children) with reduced physical, sensory or mental capacities, or people with lack of experience and knowledge, unless they have received instructions regarding the use of the equipment or are under the supervision of a person responsible for their safety.

• It is recommended that children be supervised to ensure that they are not playing with the equipment;

• In case of rotation of the personnel that will work with the equipment, the new operator must be educated about the standards and the operation of the same one;

• The operator must use the **Adequate PPE** (Personal Protective Equipment). As for example: use Kevlar or non-flammable fabric hoses to avoid oil burns; use non-slip shoes, among others;

• The operator must always be aware of situations that can cause a risk of accidents and avoid them. For example: working with dirty floors where someone could slip and fall on the equipment;

• After reading and clarifying all doubts, this manual should be carefully stored in an easily accessible location, known to all persons who will operate the equipment and make it available to those who will carry out maintenance for any inquiries. Whenever any questions arise, be sure to check the manual. Do not operate the equipment in any way with doubts;

• In the installation, it is essential to make this manual available to the professionals who will do the same;

•Never pour water over hot oil, as it may cause major accidents. In case of an accident, use non-flammable material to extinguish the source;

• Before starting cleaning and any type of maintenance, it is essential to disconnect the equipment from the power supply and to have the burners turned off, the gas pressure regulator closed and the oil at room temperature;

• Periodically check the condition of the hose and the entire gas and electrical installation part, as well as the internal and external part of the equipment (burners, buttons, controller, etc.);

• Never place your hands or objects that obstruct the air outlet (chimney), as there is a risk of burns and fire;

• These equipment are intended to be used for commercial applications, in restaurant kitchens, hospitals and in commercial enterprises such as bakeries, butchers, etc., but not for continuous mass production of food.

ATTENTION!

Do not perform repairs on your own. Go to a servicing to qualified service personnel. Only use original parts in your equipment.

1.2 Mechanical Safety

• As the equipment is designed and produced for professional use, considering its purpose/utility, the handling of some components (for example: frying baskets) must be carried out with care.

• Before operating your equipment, make sure that the gas installation is not leaking. Only use soap suds to check for gas leaks. Make sure that the temperature and safety thermostat bulbs are in perfect condition, that is, they cannot be dented or have any other damage. Faulty thermostats impair the correct functioning of the equipment and the temperature reading, which can cause accidents.

• Insert only specific products for which the equipment is intended in the baskets and tank and never place your hands or flammable products, close to or directly in the heated oil or in the air outlet (chimney).

• When cleaning the equipment, be very careful. Switch off the equipment and close the gas pressure regulator (gas valve). Then wait for the oil to cool completely. Never put your hands or cleaning products on the heated equipment. For further information on cleaning the equipment, follow the instructions in item 5 of this manual.

• Never pour water over the oil, as this could cause a serious accident;

• Your equipment has baskets for the arrangement of fried foods;

• Avoid spilling oil on the floor, as it will make the floor slippery, which may cause accidents. In case of oil spills, clean the floor immediately.

The equipment described in this manual complies with the regulation against mechanical risk.

Mechanical safety is ensured with:

1. The **structure and door** that protect the entire tank (which is heated to high temperatures) and burners. This avoids burns to the operator and access to the electrical part;

2. The **frying basket** that facilitates the handling of fried foods;

3. **Basket support,** to suspend the baskets for a certain time after frying, in order to let the oil drain and reuse it;

4. **Grid** prevents food to be fried directly in the tank from sinking during frying, preventing accidents.

To view the parts described above, refer to the image in item 2.1 (Main Components – page 7) of this manual.

ATTENTION!

Always that some item referred to safety be removed from the equipment (for example, for cleaning or maintenance), replace it in place and confirm that it is performing its function correctly.

1.3 Electrical Safety

• Periodically check the condition of cables and electrical parts;

• If the power cord is damaged, it must be replaced with a new one. The exchange must be carried out by the manufacturer, an authorized agent or a qualified person in order to avoid risks;

• Never pour water on your equipment. If the oil is hot, it can cause a serious accident and it can still run to the electrical connectors and cause an electric shock;

• Do not work with the equipment in damp places, or with wet clothes and shoes. Put on proper footwear, this will avoid electric shocks and even death;

• Place the equipment on a firm, dry and well-leveled surface;

• Never carry out any maintenance, adjustment or disassembly operation on the equipment with it turned on. For such procedures, make sure that it is turned off, removing the plug from the electrical network, turning off the burners, closing the gas pressure regulator (register) and verifying that the equipment is at room temperature;

• Do not use extension cords or adapters with various other equipment connected to them. This could cause fire or overload;

• To regulate the operating temperature of the equipment, there is a temperature controller. This panel must be used to adjust the temperature according to the needs of the product to be fried. We recommend regulating the control up to a maximum of 200°C, avoiding overheating of the oil. When the temperature reaches the stipulated zone, the thermostat will turn off the burners and automatically turn off the signal lamp. See the location and functions of these components in item 4.2 (Commands);

• The equipment also has a safety thermostat, which switches off the equipment in case the temperature thermostat fails. For more information on this thermostat, check item 4.2 (Commands) of this manual.
Removing or tampering with any of the security systems can cause serious accidents.

The components used for safety against electrical hazards have been selected in accordance with applicable standards. Given the perfect insulation of all electrical parts and the excellent resistance of all the materials used, this equipment is capable of carrying out the tasks it is intended to do.

ATTENTION!

When you have to leave the equipment stopped for a long period of time, disconnect it from the mains and carry out the total cleaning.

Always that some item referred to safety be removed from the equipment (for example, for cleaning or maintenance), replace it in place and confirm that it is performing its function correctly.

2. Technical Characteristics

2.1 Main Components

For the equipment described in this manual, safety in use, cleaning, maintenance and maximum hygiene are guaranteed by the design and special design of all parts, as well as the use of stainless steel and other materials suitable for contact with the foods.

• Grid in galvanized steel protecting the steel surface against corrosion. Non-toxic material and ideal for contact with food.

• Tank, structure, air outlet head, frying basket and basket support made of stainless steel, which resists the attack of various corrosive agents, such as most organic acids, organic substances in general, alkalis, oxy-salts, etc.

Attention: stainless steel is attacked by sulfuric acid, and it is also not resistant to hydrochloric acid, diluted sulfuric acid, chlorides and halides in general.

See below the main components of the equipment:

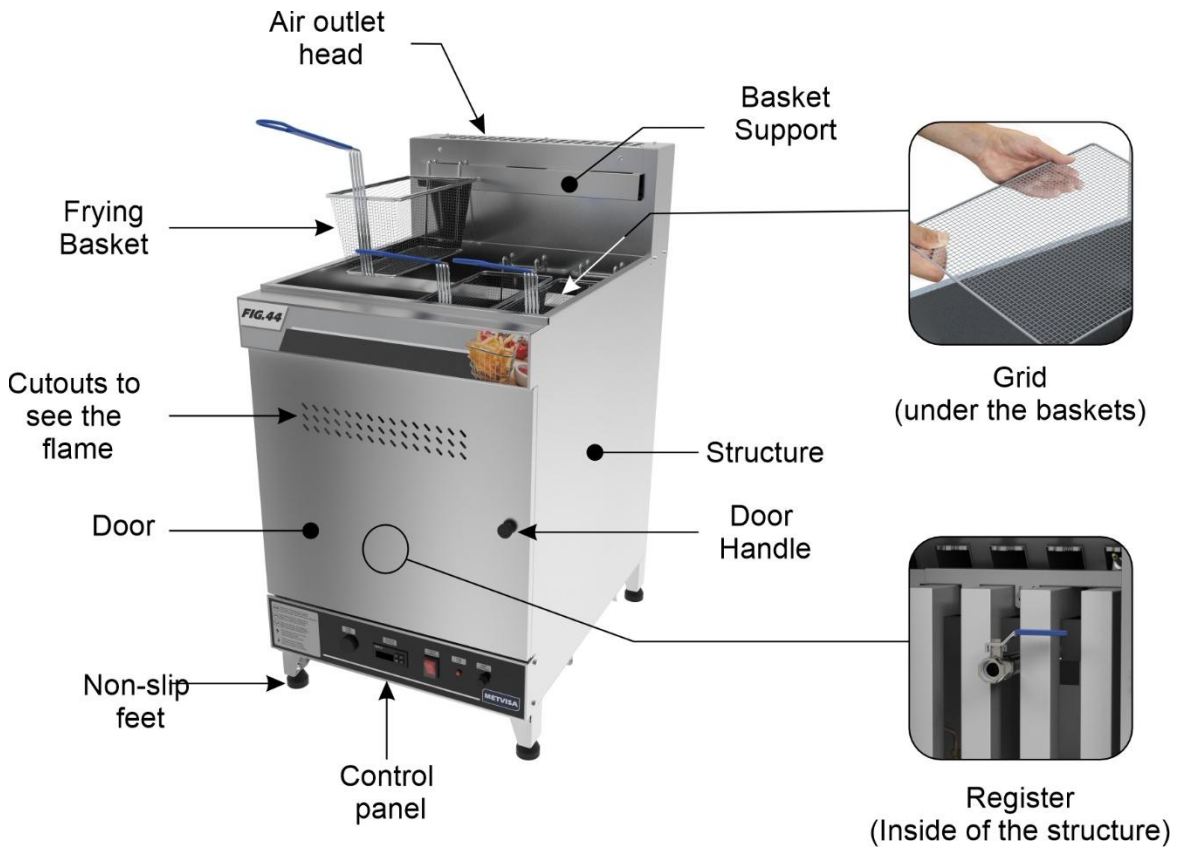

Note: For exploded drawing with spare parts list, see annexes.

2.2 Technical Data

Model	Nominal Measures of Use LxHxW (mm)*	Net Weight (kg)	Rated Thermal Power (W)	Voltage (V)	Indicated Maximum Temperature (°C)	Max. Capacity Oil (L)	Quantity Basket (units)	Maximum Load per Basket (kg)
FIG201275	388x1060x766	38,0	12300	127	200	20	02	1,0
FIG202205	388x1060x766	38,0	12300	220	200	20	02	1,0
FIG201104	388x1060x766	38,0	12300	110	200	20	02	1,0
FIG202201	388x1060x766	38,0	12300	220	200	20	02	1,0
FIG202202	388x1060x766	38,0	12300	220	200	20	02	1,0
FIG202204	388x1060x766	38,0	12300	220	200	20	02	1,0
FIG441275	570x1100x780	48,6	15400	127	200	44	03	1,0
FIG442205	570x1100x780	48,6	15400	220	200	44	03	1,0
FIG441104	570x1100x780	48,6	15400	110	200	44	03	1,0
FIG442201	570x1100x780	48,6	15400	220	200	44	03	1,0
FIG442202	570x1100x780	48,6	15400	220	200	44	03	1,0
FIG442204	570x1100x780	48,6	15400	220	200	44	03	1,0
Note: Dimensions considered with frying baskets assembled.								

ATTENTION!

Characteristics like: model, serial number and voltage of the equipment are provided on the label (figure below). Before installation, check that the power supply voltage of the equipment corresponds to that of the mains.

2.3 Supply and Disposal of Equipment Packaging

The equipment is packed with wood or cardboard to ensure its perfect integrity during transport and is accompanied by the following documents:

• Instruction Manual for Installation. Use, Maintenance and Safety;

IMPORTANT

The packaging components (cardboard, wood, foam, strips, etc.) are products that can be assimilated to municipal solid waste and can be disposed of without difficulty. If the equipment is installed in countries with different standards, dispose of the packaging in accordance with current regulations. Dispose of the product correctly to help protect the environment. For more information on recycling, contact your local authorities, waste disposal service or the shop where you purchased the product.

3. Installation

3.1 Equipment Layout

Connection to the electricity and gas network and provision for operation must be carried out by a qualified professional. Check that the voltage of the equipment is in accordance with that of the electrical network.

When installing, it is essential to make this manual available to the professionals who will carry it out.

To ensure the correct functioning and safety, the equipment must be positioned in a ventilated environment and on a sufficiently wide, well-leveled, dry and stable support surface, away from heat sources and water taps, in a place where there is no heavy traffic of people. Install your equipment leaving a clear area on the front and on top of the equipment and a distance of at least 30 cm on the right and rear sides, and 1 m on the left side for the gas installation so that you have enough space for inspection, maintenance, cleaning and use.

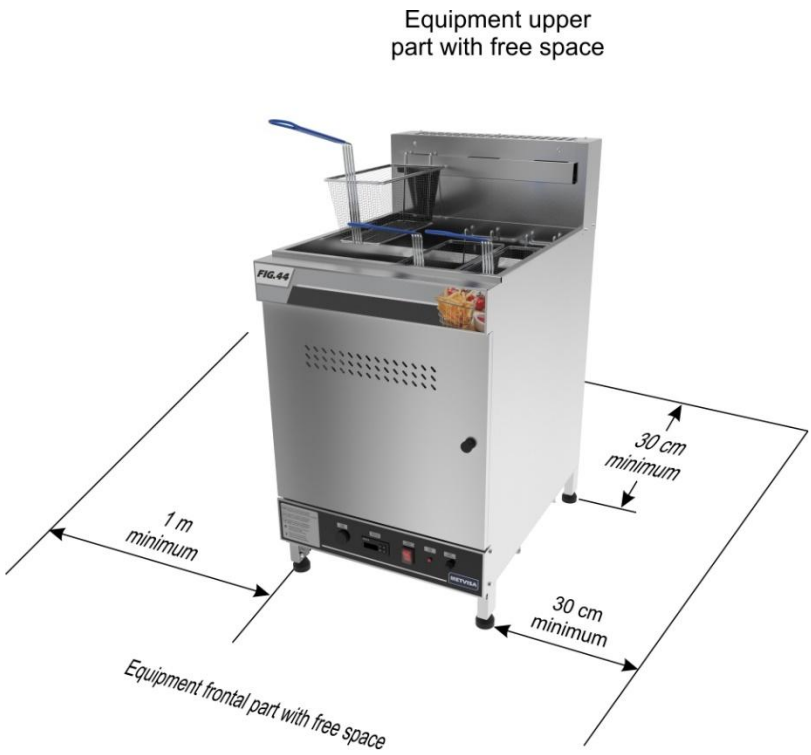

It is recommended that the place/establishment where this equipment is installed/used is equipped with an appropriate fire extinguisher, in accordance with the standards and requirements of local legislation. The use of carbon dioxide extinguishers (also known as a carbon dioxide CO2 extinguisher) is recommended. Do not use chemical powder or water extinguishers, as these will only increase the fire.

Another important recommendation is to install a hood or extractor above the equipment to collect the vapors, preventing them from spreading in the environment.

IMPORTANT

To install the hood, follow the manufacturer's instructions, as this item is not included with the equipment.

ATTENTION!

The installation and the place where the equipment will be placed must comply with the rules of risk prevention and safety at work (Regulatory Norm NR-12 for Brazil or according to the regulatory standard in force in your country).

Do not install the equipment near flammable materials or products.

The manufacturer is not responsible for possible direct or indirect damages caused by non-compliance with said standards and other instructions presented in this manual.

3.2 Electrical Connection

The equipment is supplied with a power cord to be connected to an electrical network. If the power cord is damaged, it must be replaced with a new cord. The exchange must be carried out by the manufacturer, authorized agent or qualified person in order to avoid risks.

The plug type of the power cord varies by country. Normally the plug has 3 round pins, there being just below each pin, a corresponding marking for each one (Phase, Ground and Neutral).

The equipment must be installed by a qualified technician for this function and in compliance with the regulations in force in the country, especially with regard to the ground connection (if applicable).

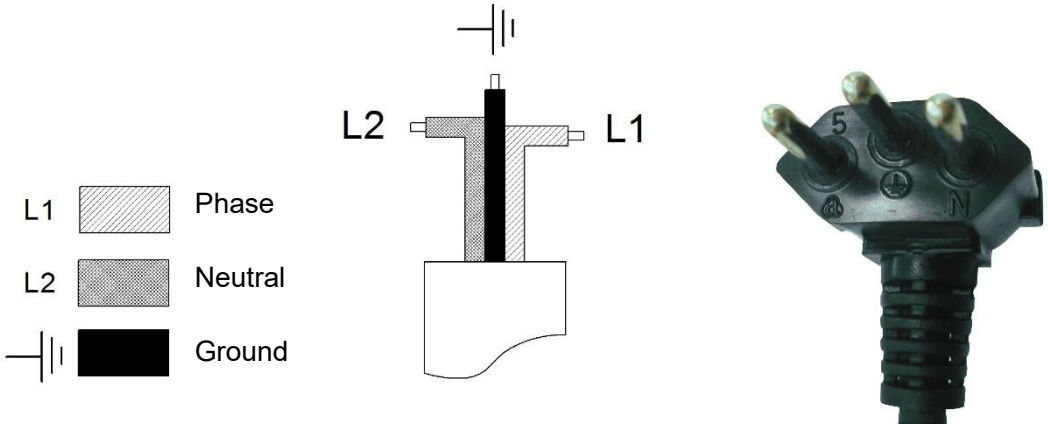

All models of the equipment described in this manual are single-phase and have a single voltage, 110 V, 127 V or 220 V. If it is necessary to change the voltage on your equipment, contact the manufacturer or an authorized dealer.

The fryer also comes with an equipotential grounding terminal, located on the lower rear base of the structure.

Equipotential
grounding terminal

The terminal identified in the figure aside is an additional protection to the grounding that is provided for in the electrical network, it must be connected to a grounding terminals, regardless of the connection to the electrical network, and the other products that have accessible metallic parts, and that are stationary, must also be connected to this bus as well as the service bench itself, if it is made of metallic material. In this way, all these products will be under the same electrical potential, avoiding undesirable leakage currents.

ATTENTION!

Before turning on your equipment, always check that the mains supply voltage is the same as the equipment voltage. If it is not the same, contact the manufacturer or authorized dealer.

The supply voltage of this equipment is 110 V, 127 V or 220 V single-phase, as can be verified on the voltage label affixed to the power cable or as indicated on the nameplate data label, which is located on the right side of the equipment (see the figure on this label in item 2.2 of this manual).

Make sure that the voltage of the electrical network where the equipment will be installed is compatible with the voltage indicated on these labels.

For more details on the rest of the electrical part of the equipment, refer to the electrical diagram in the annexes of the manual.

IMPORTANT

The manufacturer is not responsible for possible direct or indirect damage caused by non-compliance with the rules and instructions presented in this manual.

3.3 LPG Gas Installation - Recommendations and Care

Check that the place where the equipment will be installed is ventilated and in accordance with the Rules for the Prevention of Risks at Work and Safety at Work on Machines and Equipment (Regulatory Norm NR-12), and periodic inspections by a technician are recommended to ensure that its components are in working condition.

ATTENTION!

The equipment must be arranged in a ventilated place, but without air current, thus avoiding the extinguishing of the flames in the burners, causing gas leakage.

The gas installation must be done by a qualified technician for this function and observing the safety rules.

The equipment must be installed with the following recommendations and items described below **BUT NOT SUPPLIED WITH THE EQUIPMENT:**

• **Gas cylinder** – 02 cylinders with a minimum mass of 13 kg (code P13) of LPG (liquefied petroleum gas) will be required for this equipment. The cylinders must comply with the ABNT 8460 standard for Brazil or according to the regulation in force in your country. Check the product warranty seal. If you have violated, do not install.

ATTENTION!

Never install only a single gas canister, freezing may occur with this canister.

For gas installation code P45, please contact your local gas installation company in your city.

• **Pressure Regulator or Gas Register** – use only a 13.2 kPa pressure regulator, with a flow rate suitable for the appliance and properly certified. When installing the regulator, turn the handwheel clockwise until it is firmly tightened. Tighten by hand only. Never use tools for this operation.

• **Hose** – the model with INMETRO certification has the NBR 8613 engraving, made of transparent PVC plastic with a yellow stripe. The fryer is manufactured with a connection for 3/8” hoses. The hose must not cross or be embedded in walls, and must not make any type of splice (welding or gluing). Fix the ends only with appropriate clamps. Never use wires or ribbons. Always check the expiry date of the hose.

IMPORTANT

In addition to the instructions given in this manual, it is also recommended to follow the cylinder, pressure regulators (gas register) and gas hoses manufacturer's instructions, as these items are not included with the equipment.

ATTENTION!

Change the pressure regulator every 5 years or when it is defective.

Always use the gas cylinder in an upright position. Never overturn, pour or tilt the cylinder, as the gas may flow into the liquid phase, canceling the pressure regulator function, which can cause serious accidents.

Never install the cylinder close to heated surfaces, and keep the gas conductive hose protected from heat so it does not melt, causing fire or other accidents.

ATTENTION!

This equipment operates with LOW PRESSURE GAS. If your supply network has high pressure, have the low-pressure outlet valve checked by a technician.

If the equipment is switched on at high pressure, the components will be damaged, in addition to creating risks for the operator.

After installation and for your safety, check for gas leaks using soap suds only. If there is a leak, inform the technician to repeat the installation.

If the leak persists, take the cylinder to a well-ventilated place and notify the company that sells or distributes the cylinder.

IMPORTANT

The manufacturer is not responsible for possible direct or indirect damage caused by non-compliance with the rules and instructions presented in this manual.

3.4 Safety Procedures and User Instruction

The professional who sells the equipment must instruct the user on the correct functioning of the equipment and must hand over this instruction manual.

The user must be informed of the necessary safety measures and must respect them, as well as all measures described in this manual.

Your equipment has mechanical protections (see item 1.2 Mechanical Safety) that prevent access to burners and electrical components. Removing or tampering with these safety components can cause serious risks to the operator's upper limbs

4. Equipment Use

4.1 Utility

This equipment must be used to fry food products in edible oil for this purpose.

4.2 Commands

Positioned in front of the equipment, you can see the control panel with the alarm, temperature controller, on/off button, flame signal lamp and the reset button (safety thermostat). Inside the structure under the tank are the register.

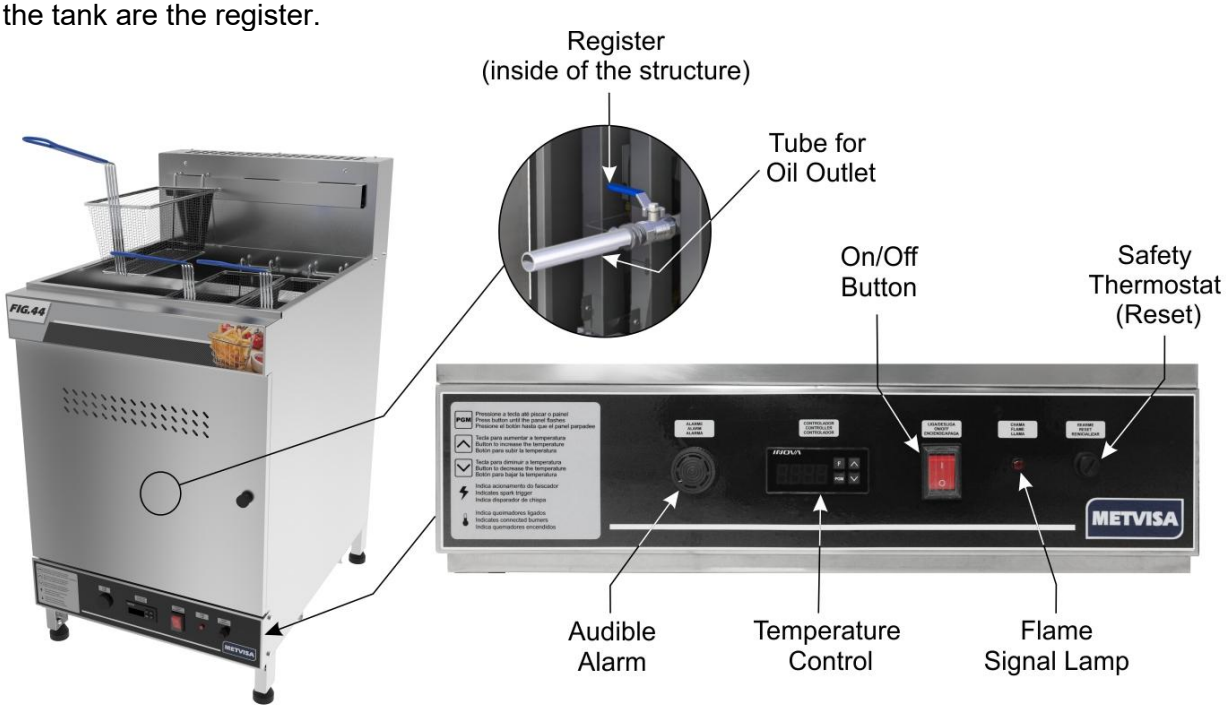

See description of each command below:

- **Register:** used to drain the oil, in case of changing, cleaning or maintenance of the equipment. For this, it is necessary to thread the oil outlet tube before opening the valve. Follow the instructions for removing the oil in item 5.1 (Cleaning).

- **Audible Alarm:** The alarm is activated when the equipment has an error in operation or at the end of the time programmed in the timer.

- **On/Off button:** to turn the equipment on and off. In the “1” position it switches on and in the “0” position it switches off.

- **Flame Signal Lamp:** it has the function of indicating when the equipment is starting to heat up. When the selected temperature is reached, the lamp will automatically turn off, turning off the flame.

- **Reset Button:** is a component of the safety thermostat. It is used to reset the equipment when the temperature thermostat is faulty and/or defective. Allow at least 10 minutes for the oil to cool before resetting. To activate the button, unscrew the cap and use a pointed object (a pen, for example) to press the button.

ATTENTION!

When a defect in the temperature thermostat is found, immediately take your equipment to an authorized technical assistance center to carry out the exchange. After changing the temperature thermostat, it is necessary to reset the equipment by pressing the “RESET” button. Set the temperature on the controller again according to the product to be fried.

- **Temperature Controller**: used to program the desired temperature and time according to the product to be fried. The description of each function follows:

PGM Programming access button;

F Time programming button;

Up Button: increases the programmed value;

Down Button: decreases the programmed value;

Led that indicates activated burners;

Led indicating spark activated;

Led that indicates timer activated;

Led indicating alarm/error.

The controller has a safety system that checks for possible equipment failures. These faults can be seen on the display (table below), at this moment the audible alarm will be activated. To deactivate the error alarm, it will be necessary to turn off the equipment using the On/Off button in the “0” position.

Check the description for each fault:

Display	Description
ErrO ELEt	Jumper in place of flame sensor not detected when in electrical mode.
GAS FALh	The controller has exhausted the programmed ignition attempts and has not detected the presence of flame in the sensor. Check the distance between the flame sensor and the burner.
ı - ı	The controller detected a short circuit between the flame sensor and the burner during start-up.
SEnS curt	The controller has detected a short circuit in flame sensor 1 for more than 3 seconds.
tEr FALH	Thermocouple failure. Thermocouple is not connected or is defective.
ErrO dAtA	Fault detected due to some corrupt configuration parameter. For safety, all parameters must be reset to their factory value. The user must turn the controller off and on to return to operation and analyze a need to reprogram the equipment.

4.3 Operating Procedures

Before operating the equipment, remove the protective film from the stainless steel plates and clean it perfectly, especially the components that will come into contact with food. Clean the equipment with the burners off, the gas pressure regulator (gas register) closed and the oil at room temperature. Follow the cleaning instructions in item 5 of this manual (below).

After these initial precautions, confirm that the power supply voltage is the same as that of the equipment and that the temperature and safety thermostat bulbs are in perfect condition, that is, they

cannot be dented or have any other damage. Faulty thermostats impair the correct functioning of the equipment and the temperature reading, which can cause accidents. Also check the correct arrangement of the equipment, instructed on page 9 and follow the care and recommendations of the gas installation, according to the guidelines in item 3.3 (page 12).

The equipment can only be switched on and operated after filling the oil tank. Never start your equipment with an empty tank, as this will cause damage to the entire structure of the equipment and accidents.

ATTENTION!

There are risks of accidents if the oil level is below the "MINIMUM OIL" minimum level or above the "MAXIMUM OIL" maximum level (marking indicated on the inside of the tank).

Avoid serious accidents, always respect the maximum and minimum oil levels indicated on the equipment.

Operation:

1. Check that the register under the tank is closed;

2. Fill the tank with edible oil up to the "MAXIMUM OIL" level - upper marking indicated on the inside of the tank. Note: Recommended edible oil type: sunflower, soybean or corn. Hydrogenated or vegetable fat and cottonseed oil are not suitable for this equipment;

3. Connect the power cable to the electrical network and open the cylinder's gas valve;

4. With the fryer door closed, turn the on/off switch to the "1" on position. After approximately 5 seconds, the equipment will automatically light the burners and heat up to the factory preset temperature of 200°C. Visualize the flame through the cutouts in the door;

ATTENTION!

Keep the door closed when using the fryer. Always visualize the flames through the door cutouts.

Never place your hands or objects that obstruct the air outlet (chimney), as there is a risk of burns and fire.

The fryer leaves the factory with a temperature setting of 200°C. Due to this programming, as soon as the on/off button is pressed, the fryer starts heating.

If it is necessary to activate the timer function, press. F The equipment leaves the factory with 20 minutes programmed.

To reset the temperature and time, follow the instructions below.

Until the fryer reaches the set temperature, check the flame quality. The ideal flame should be blue in color. Follow the instructions below to adjust the flame:

• Open the door using the handle to have access to the burners;

• Each burner tube has an oxygen regulator (clamp), where they are preset at the factory. To regulate the ideal flame of each burner, slide the oxygen regulator on the burner tube, releasing the air inlet more or less.

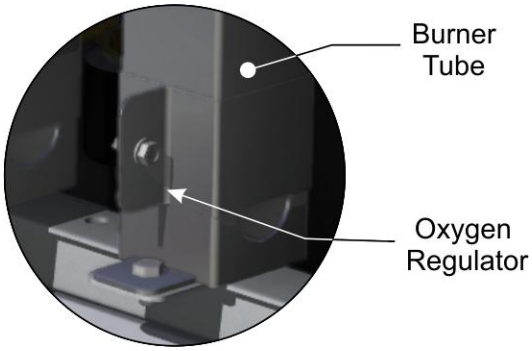

1. To change the temperature, start programming the fryer by pressing the programming access button on the PGM-oller. At this moment appears on the display; SP-t

2. Enter the desired temperature in °C using the up ^ and down v buttons. The selected value will appear on the display.

3. To confirm the temperature, press the button. PGM Then appears on the display tPo giving access to the time programming;

4. If necessary, to change the time schedule, enter the time in minutes using the up ^ and down v buttons. Confirm the time using the button PGM. The time counts backwards. To start counting, it is necessary to press the button F after programming.

In addition to activating the timer, the button F also has the function of deactivating and restarting the time even before the time counts out. At the end of the programmed time, an audible alarm will sound. To deactivate the weather alarm press F.

ATTENTION!

For your safety and not to compromise the life of the equipment, and to prevent the oil from overheating, the maximum temperature supported by the fryer is up to 200°C.

Failure to comply with this guideline will be considered an unsafe act and abusive use of the equipment.

5. Add the product to be fried in each basket, and take it to the oil properly heated at the programmed temperature;

ATTENTION!

Never open the drain valve of the fryer while the oil is still hot, as the hot content will come out of the valve, which can cause serious accidents.

ATTENTION!

Add the products to be fried slowly and gradually into the basket, thus avoiding bubbling and oil spillage from the tank. The bubbling will be intense when pouring frozen or wet products.

Attention must be paid to the effect of increased boiling in wet foods and for very large loads.

Never pour water over hot oil or move the equipment during use, as this could cause a serious accident.

Do not shake any of the baskets immersed in the oil, this may cause the oil to overflow or cause hot oil to splatter.

Use appropriate PPE and whenever the floor is dirty, clean it.

In an emergency, unplug the equipment from the electrical network.

6. Allow time for the product to fry completely (until it turns brown). After that, hang the basket on the support to let the excess oil drain;

7. After finishing the work, turn off the equipment by pressing the on/off button in the “0” (off) position and close the cylinder's gas valve;

8. Before cleaning your equipment, wait until the oil reaches room temperature.

ATTENTION!

After finishing the work step and turning off the fryer, close the gas pressure regulator (register), because if it happens to be left open, the pressure exerted on the hose could damage it or break it, which could cause fire or other accidents.

When you have to leave the equipment stopped for a long period of time, disconnect it from the electrical network and carry out perfect cleaning.

Always clean the equipment after use (see instructions in item 5 of the manual), put the equipment components back in their proper places and check the oil level and top up if necessary. After these procedures, the equipment will be available again to restart the operating process.

ATTENTION!

Even though there is a safety system in the controller (which cuts off the gas in case the flame of any burner goes out), in case of ignition failure and if you smell gas in the environment, do not light it.

Wait a few minutes for the air in the room to be renewed, and only then turn on the equipment.

In case of any irregularity, contact the nearest authorized technical assistance service.

IMPORTANT

It is recommended not to use the same oil for many operating cycles. It is dangerous to use old oil as it may have a lower flash point and may be more prone to boiling over.

To increase the life of the oil, set the temperature to 100°C during the interval between frying and frying.

According to ANVISA (National Health Surveillance Agency) instructions, some care must be taken with the oil used in frying. Here are some of them:

• "The oil must be filtered at each end of use. During the frying of food, especially breaded foods, which tend to release particles from their surface, remove visible residues in the oil with the help of an appropriate utensil".

• "Oil should be discarded when foam and smoke are observed during frying, intense darkening of the oil and food color and perception of uncharacteristic odor and flavor. It is worth remembering that the appearance of smoke is different from the naturally released steam".

• "Oil should not be disposed of in the public sewage system, housewives can pack it in plastic bags or containers and add it to organic waste. As for merchants and fast-food outlets, as they discard a significant amount, it is suggested to contact companies, bodies or entities licensed by the competent body in the environmental area".

(Source: ANVISA - Technical Report No. 11, of October 5, 2004; Subject: Oils and Fats Used in Frying).

5. Cleaning and Maintenance

5.1 Cleaning Procedures and Products Used

Your equipment was built with first-line materials, so use it properly and you will obtain great satisfaction. Always keep your equipment clean and well-cared for, which will make it much more durable.

ATTENTION!

Before carrying out maintenance or cleaning, make sure that the on/off switch is in the "0" (off) position, that the plug is disconnected from the mains, the gas valve of the cylinder is closed and the oil at room temperature.

The equipment must be cleaned daily to obtain a good operation and greater durability. Clean the sides and top of the tank. Scrape with a plastic spatula making the accumulated residues go down to the bottom, mainly in the frying of breaded.

Change the oil whenever necessary. Check the instructions, warnings and recommendations regarding oil change below.

ATTENTION!

Do not use water jet to clean the equipment.

IMPORTANT

This equipment is not intended to be immersed in water for cleaning.
Follow the instructions below to learn the parts that can be immersed and what special care is taken with the other parts.

During cleaning, care must be taken to eliminate the risk of electric shock and burning of electrical components of the equipment. It is recommended:

• Never wet the structure or external parts, as water may run down to the electrical parts;

• Never throw water directly on the power cord;

Procedure for removing the oil:

• To change the oil, always disconnect the equipment from the electrical network, close the gas valve and wait for the oil to cool completely;

• Screw the outlet tube into the valve to remove the oil;

• Position an appropriate container for collecting the oil under the valve;

• After the complete removal of the oil, close the register;

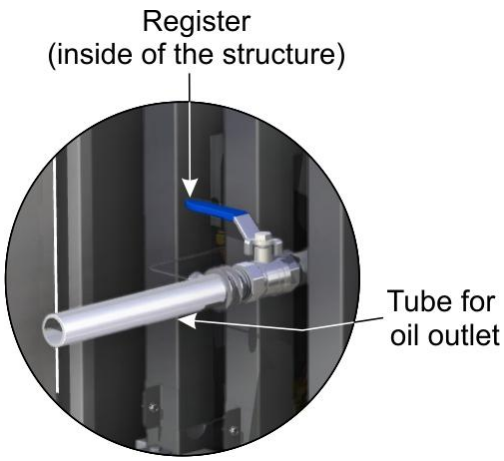

Procedure for cleaning the tank without oil:

- Close the valve and clean the inside of the tank. Use mild soap or detergent and a non-abrasive sponge;
- Place a container for collecting the soap under the register and open the register;
- Rinse the inside of the tank to completely remove the soap, after drying the tank with a soft, dry cloth.

ATTENTION!

After cleaning, never leave water, soap or any other residue inside the tank before inserting the oil.

The baskets, the grid and the basket support, as they are removable, can be immersed and washed separately with soap or neutral detergent. The rest of the equipment should only be cleaned with a damp cloth as many times as possible, in order to prevent food residues from drying out.

Never use sharp objects, sponges or abrasive products, as they can scratch or damage the surface of the parts.

Clean the corners of the equipment well, removing food and oil residues.

ATTENTION!

It is extremely important that the products used for cleaning ensure maximum hygiene and that they are non-toxic.

Never use abrasive products or sponges (soap, brushes or steel wool) and substances containing acids or chlorine to clean metal parts, as they can scratch or damage the surface of the parts causing corrosion points. Do not pour water on the electrical parts for cleaning, otherwise, turning it on may cause an electric shock or even burn the equipment.

5.2 Breakdown Maintenance and Procedures

The operator must be instructed to carry out routine inspections, making small adjustments, cleaning and observing signs of breakdowns that may occur. Examples include: checking for strange noises indicating gas leaks; burners that do not light; the non-execution by the equipment to the service to which it is proposed; among others. Actions like these are indispensable to guarantee a longer equipment life.

ATTENTION!

When maintenance is carried out (even if minor adjustments are made), always check that the equipment is disconnected from the electrical network, with the gas register of the cylinder closed and the oil and equipment at room temperature.

It is recommended that each 6 months be made preventive maintenance, checking and adjusting the loose, cleaning the internal parts, and others. Detecting broke parts or without the correct functionality the worker needs to exchange the parts, always using original parts only.

By carrying out preventive maintenance, the inconvenience of having the equipment stopped when it is most needed is eliminated, the cost of maintenance is reduced and the risk of accidents is reduced.

Follow the equipment maintenance and adjustment recommendations:

• Change the pressure regulator every 5 years or when it is defective;

• After use, keep the gas valve closed, avoiding pressure on the hose;

• The gas injector on the burner must always be unobstructed. If they become clogged, use a needle for cleaning on stove tops;

ATTENTION!

Preventive maintenance requires a trained professional.

Whenever an item related to the safety of the equipment is removed (such as when performing maintenance), put it back in its proper place and confirm that they are performing their function correctly.

Detecting broke parts or without the correct functionality, please contact the nearest authorized service center.

5.3 Prolonged Interruption in Use of the Equipment

When you have to leave the equipment stopped for an extended period of time, perform a thorough cleaning, including the accessories. It is advisable to protect all parts of the equipment with white petroleum jelly or with suitable products that are commercially available. You must also protect the equipment from dust by covering it with a nylon or other material.

6. Analysis and Troubleshooting

6.1 Problems, possible causes and solutions

IMG quality products are designed with materials and components that guarantee a longer service life for your equipment. However, due to natural wear, improper use or lack of maintenance, the equipment may have irregularities in its operation.

In the following table, you can see possible causes and solutions:

PROBLEMS	POSSIBLE CAUSES	SOLUTIONS
Equipment do not turn on	Lack of electricity.	Check if there is power on the network.
		Check that the power cord is plugged into an outlet.
	Equipment voltage different from mains voltage.	Send the equipment to the nearest authorized service station or contact the factory.
	Safety thermostat activated.	After the oil has cooled down, press the reset button and turn the equipment on again.
	General electrical problems (thermostats, wiring, reset button, bulbs).	Send the equipment to the nearest authorized service station or contact the factory.

Equipment shuts down during the operation.	Lack of electricity.	Check if there is power on the network.
		Check that the power cord is plugged into an outlet.
	General electrical problems (thermostats, wiring, reset button, bulbs).	Send the equipment to the nearest authorized service station or contact the factory.
	Safety thermostat activated.	After the oil has cooled down, press the reset button and turn the equipment on again.
		Send the equipment to the nearest authorized service station or contact the factory.
	Lack of gas.	Check if there is gas in the cylinder, if the gas cylinder valve is open, if the gas hose is connected and if the gas regulator is open.
Equipment leaking oil.	Badly fixed or closed register, thread wear or collision.	Send the equipment to the nearest authorized service station or contact the factory.
Equipment with a burning or smoke smell.	Equipment voltage different from mains voltage or electrical problems.	Send the equipment to the nearest authorized service station or contact the factory.
	Burned Food	Too high temperature and/or frying time.
	The oil has lost its ideal characteristics for frying.	It is recommended not to use the same oil for many operating cycles. Check some instructions from ANVISA (National Health Surveillance Agency) on page. 19.
The equipment takes a long time to fry the food.	Low Temperature	Press the PGM button on the controller to check the programmed temperature.
	General electrical problems (thermostats, wiring, reset button, bulbs).	Send the equipment to the nearest authorized service station or contact the factory.
Burners do not light	Lack of gas.	Check if there is gas in the cylinder, if the gas cylinder valve is open, if the gas hose is connected and if the gas regulator is open.
	Burner clogged.	Clear the burner holes, as instructed in item 5.2 (Maintenance).
		Send the equipment to the nearest authorized service station or contact the factory.
	Lack of gas	See below for possible causes and solutions for gas leaks (page 24).
	Damaged solenoid valve.	Send the equipment to the nearest authorized service station or contact the factory.
Gas Leak	Burst, loose or broken register.	Send the equipment to the nearest authorized service station or contact the factory, as there is a risk of accidents.
	Register injector out of position.	
	Defective gas cylinder.	Check for gas leaks using soap suds only. If there is a leak, inform the technician to repeat the installation. If the leak persists, take the cylinder to a well-ventilated place and notify the company that sells or distributes the cylinder.
	Gas cylinder installed in horizontal position.	Install the cylinder in a vertical position. Never turn, lay down or tilt the cylinder, as the gas may flow in the liquid phase, canceling the function of the pressure regulator, which could cause serious accidents.

Equipment giving shock	Lack of Grounding	Follow the instructions in item 3.3 (Electrical Connection).
	General Electrical Problems	Send the equipment to the nearest authorized service station or contact the factory.

For more information and clarification, contact the Authorized Technical Assistance nearest you. See list of technical assistance on our website: www.metvisa.com.br

7. Useful Life of the Equipment and its Components

The equipment's useful life can vary from 3 to 5 years depending on the proper use, cleaning, maintenance and quality of its components.

Below is the useful life ratio of the main components:

• Temperature thermostat: 100,000 cycles;
• Safety thermostat: 100,000 cycles;
• Electric cables and wires: 25 years;
• Electrical terminals: 8 years.

8. Applicable Standards

The Brazilian standards applied for the development of the equipment and preparation of this manual are:

- NR-12 - Decree 197 of December 2010;
- Applicable Technical Standards (ABNT NBR).

9. ANNEXES

Electrical Schematic FIG.20/44

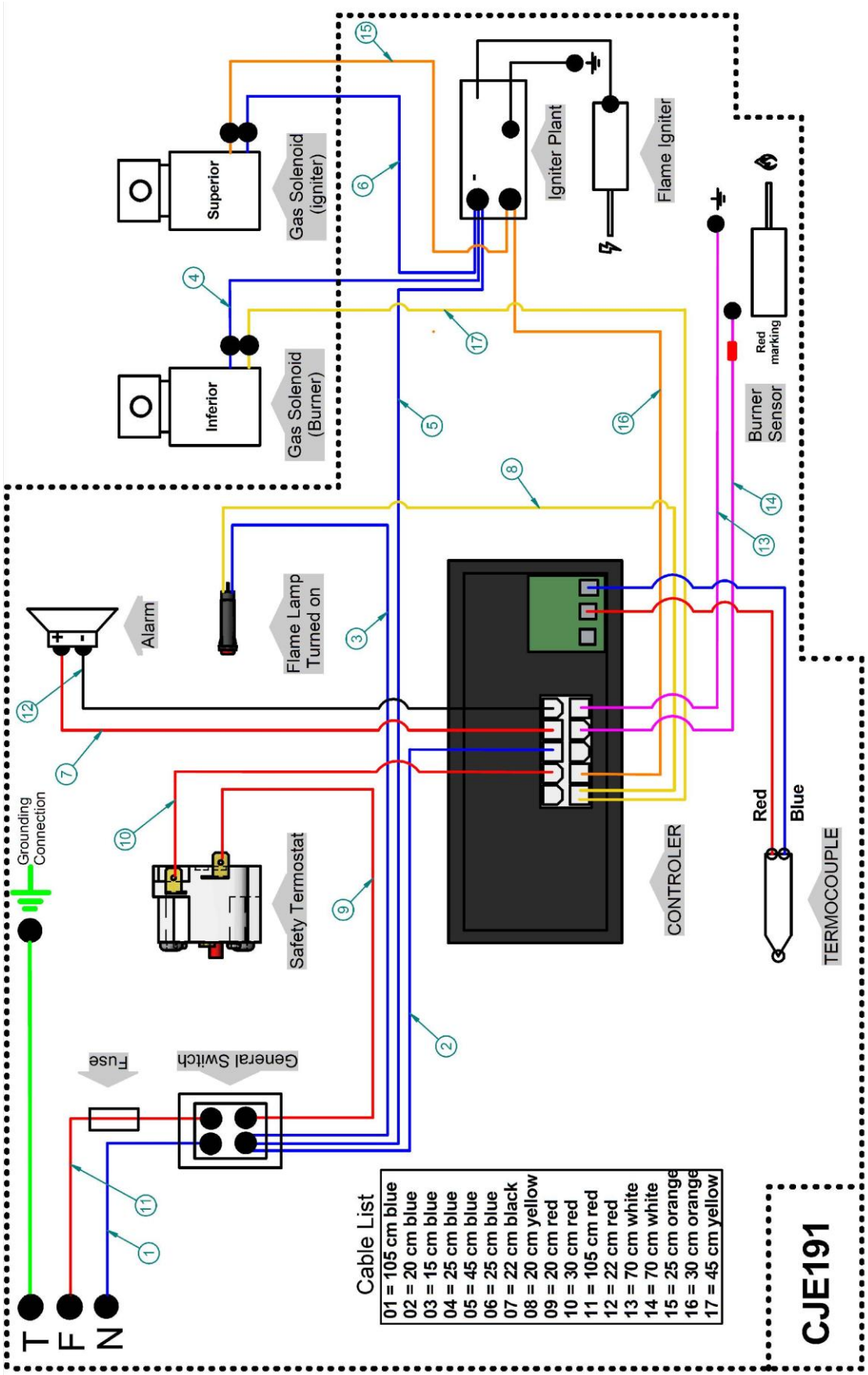

Exploded View Drawing

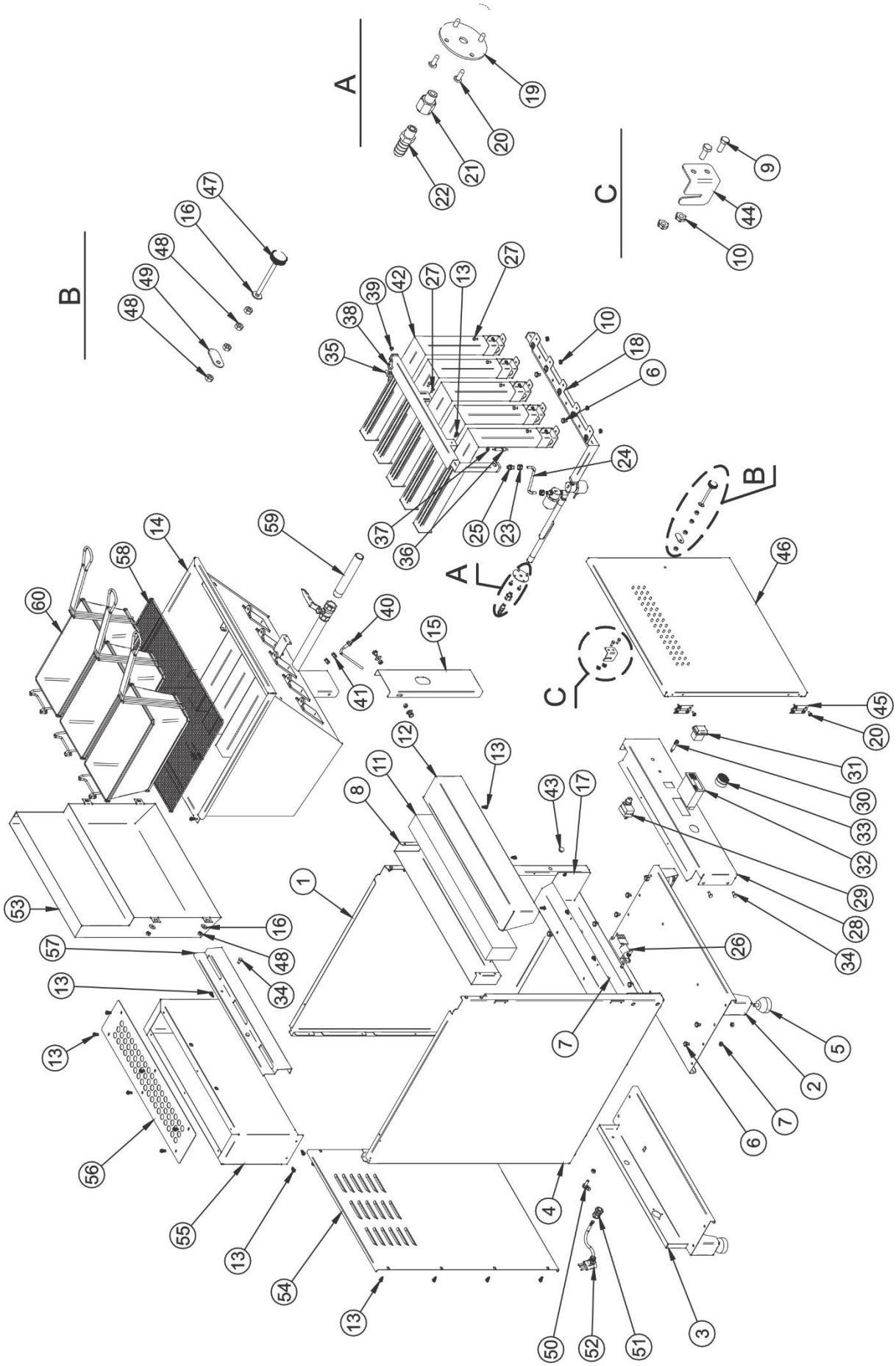

[1] Image merely illustrative. Appearances can vary according to the model.
[2] Electrical components not indicated by the image. Follow the spare parts list.

Spare Parts List

Item	Code	Description	Qnty.	Model
1	GAB321	Right Side Structure	1	*
2	CJT1513	Set Front Lower Base Welded	1	FIG.44
	CJT1515			FIG.20
3	CJT1518	Set Rear Lower Base Welded	1	FIG.44
	CJT1521			FIG.20
4	GAB322	Left Side Structure	1	*
5	PEP019	Rubber Foot	4	*
6	PRS014	Hex Screw	20	*
7	POS005	Hex Nut	20	*
8	PTC176	Upper Front Internal Protection	1	FIG.44
	PTC239			FIG.20
9	PRS045	Stainless Steel Hex Screw	6	*
10	POS020	Stainless Steel Hex Nut	13	FIG.44
			12	FIG.20
11	TER011	Rock Wool 32 kg/m³ 87x549x51mm	1	FIG.44
	TER037	Rock Wool 32 kg/m³ 87x369x51mm		FIG.20
12	PTC174	Upper External Shield	1	FIG.44
	PTC238			FIG.20
13	PRA014	Stainless Steel Self-Drilling Hex Screw	28	*
14	CJT1519	Assembled Tank	1	FIG.44
	CJT1522			FIG.20
15	AMP156	Tank Support	1	*
16	ARL010	Stainless Steel Flat Washer	7	*
17	PTC267	Cable Protection	1	*
18	CJT1337	Gas System Assembly FIG44 127V	1	FIG.44
	CJT1348	Gas System Assembly FIG20 127V	1	FIG.20
	CJT1344	Gas System Assembly FIG44 220V	1	FIG.44
	CJT1349	Gas System Assembly FIG20 220V	1	FIG.20
19	SBT583	Gas Hose Barb Support	1	*
20	RBT004	Rivet	12	*
21	CNX060	Nipple 1/8" NPT (Male) x 1/8" NPT (Female)	1	*
22	CNX053	Nipple 1/2" NPT (Male) x 1/8" NPT (Male)	1	*
23	POS164	Hex Nut	2	*
24	PCT224	Gas Supply Piping	1	*
25	IJT009	20 mm Injector	1	*
26	IGN003	Electronic Ignition Module	1	*
27	PRS332	Stainless Steel Hex Screw	9	FIG.44
			8	FIG.20
28	RVB026	Front Panel	1	FIG.44
	RVB028			FIG.20
29	TMT022	Safety Thermostat	1	*
30	LPS004	Red Pilot Light	1	*
31	CHE087	Power Switch (Red)	1	*
32	TMP007	Digital Temperature Controller	1	*

* Item applied to all models of FIG.20/44 described in this manual.

Spare Parts List

Item	Code	Description	Qnty.	Model
33	ALR001	Sound alarm	1	*
34	PRS324	Stainless Steel Hex Screw	6	*
35	CJT1339	Igniter Assembly	1	FIG.44
	CJT1351			FIG.20
36	IGN001	Porcelain Flame Igniter	1	*
37	APE007	Retaining Ring	1	*
38	IGN002	Porcelain Flame Sensor	1	*
39	PRR017	Stainless Steel Round Head Machine Screw	1	*
40	TMP011	Angled Type "J" Thermocouple	1	*
41	POS009	Zinc-Plated Hex Nut	2	*
42	CJT1340	Burner Assembly with Regulator	5	*
43	BCH074	Silicone Glass Support	1	*
44	FCH018	Door Latch	1	*
45	DBC003	Stainless Steel Inverted Hinge	2	*
46	PTA014	Door	1	FIG.44
	PTA020			FIG.20
47	MNL066	Knob	1	*
48	POS157	Stainless Steel Hex Nut	8	*
49	TRV031	Door Latch Lock	1	*
50	CJT386	Assembled Equipotential Terminal	1	*
51	TCE073	Cable Gland	1	*
52	CBE023	Electric Cable - Type 1	1	**
	CBE029	Electric Cable - Type 2		
	CBE030	Electric Cable - Type 4		
	CBE142	Electric Cable - Type 5		
53	CJT1520	Chimney Assembly	1	FIG.44
	CJT1523			FIG.20
54	TAP159	Lower Rear Cover	1	FIG.44
	TAP194			FIG.20
55	CJT1343	Chimney Assembly	1	FIG.44
	CJT1353			FIG.20
56	GRA016	Safety Guard	1	FIG.44
	GRA022			FIG.20
57	SBT626	Basket Support	1	FIG.44
	SBT631			FIG.20
58	GRA007	Square Fryer Rack	1	FIG.44
	GRA015			FIG.20
59	PCT077	Auxiliary Oil Drain Tube	1	*
60	CET020	Fryer Basket	3	FIG.44
			2	FIG.20
61*	FUS002	Medium Blade Fuse	1	*
62*	CBE286	Wiring Harness	1	*

* Item applied to all models of FIG.20/44 described in this manual.
** Consult Technical Assistance or the Manufacturer.

Notes

Notes

Notas

IMG-BRASIL Gastronomy Machinery Industry Ltda.

CNPJ 11.193.347/0001-14 - CREA 131726-3
Rod. Antônio Heil – KM 23 Nº 5825 – Limoeiro
CEP 88352-502 - Brusque – SC – Brazil
Phone/fax. +55 47 3251-5555 - Site: www.metvisa.com.br
E-mail: sac@metvisa.com.br - export@metvisa.com.br - export2@metvisa.com.br

See more of our complete
line of products.